Proposed Cascade Charter Township Hall
Community Forum

March 24, 2016

Fishbeck, Thompson, Carr & Huber, Inc.

01

EXISTING TOWNSHIP HALL

Spatial Concerns

- Building Department Growth
  - Unable to expand due to zoning and structural issues.
- Limited Meeting Space
  - Rooms regularly in use for other purposes.
- Extremely Limited Storage
- Unable to accommodate new staff to support township growth.

Current Issues

- $500,000+ needed repairs
  - New Roof
  - New HVAC system
- Facility is generally worn out

02

NEEDS ASSESSMENT

Programming

Cascade Charter Township
Facility Master Plan and Administrative Office Design Study
Preliminary Program for Office Areas

Fishbeck, Thompson, Carr & Huber, Inc.
Project No. G140721
December 4, 2014

		EXISTING				PROJECTED				
		# of	# of	Room	Total	# of	# of	Room	Total	
	Function	Staff	Rooms	Area	Area	Staff	Rooms	Area	Area	
OFFICE AREAS										
1	**ADMINISTRATION**									
a	Supervisor	1	1	107	107	1	1	120	120	
b	Manager	1	1	201	201	1	1	200	200	
c	Senior Accountant	1	1	118	118	1	1	120	120	
d	Human Resources (future)		0	0	0	1	1	120	120	Asst. Clerk currently performs duties
e	Receptionist/Support	1	1	157	157	1	2	120	240	Serves all Departments
f	Accounting Clerk (future)		0	0	0	1	1	80	80	
g	Public Computer Counter Station		1	40	40		1	40	40	
h	Receipt Processing		1	35	35		0	0	0	Absorbed into Reception Area
	Subtotal - Admin. (NSF)	**4**			**658**	**6**			**920**	
2	**ASSESSING**									
a	Assessor	1	1	143	143	1	1	150	150	
b	Senior Residential Apraiser	1	1	128	128	1	1	120	120	
c	Residential Appraiser	1	1	107	107	1	1	120	120	
d	Clerk (future)		0	0	0	1	1	80	80	
e	Deed Counter Station		1	108	108		1	110	110	
	Subtotal - Assessing (NSF)	**3**			**486**	**4**			**580**	
3	**BUILDING INSPECTIONS**									
a	Building Inspections Director	1	1	192	192	1	1	200	200	
b	Permit Technician	1	1	115	115	0	0	0	0	
c	Plan Reviewer	2	2	114	228	4	4	120	480	
d	Electrical Inspector	2	2	85	170	2	2	80	160	

Benchmarking

Other City Hall Facilities Visited

- East Grand Rapids
- Kentwood
- Wyoming

Sustainable Design/LEED

Ann Arbor City Hall Tour

Prelim. LEED Scorecard

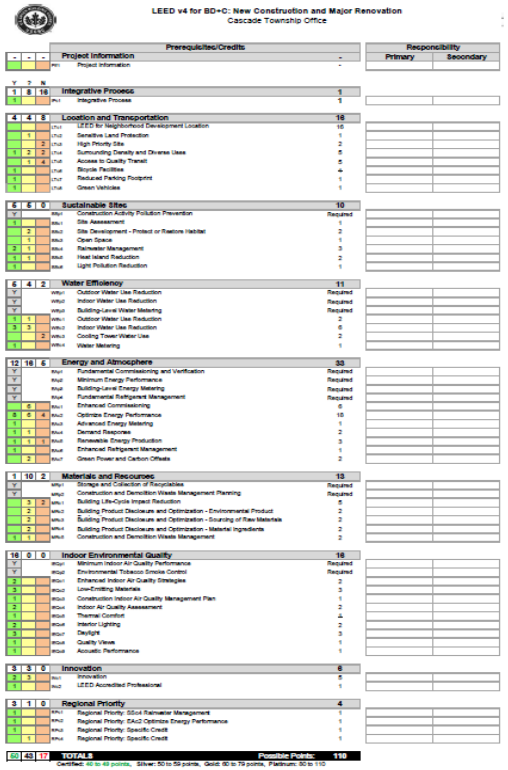

LEED v4 for BD+C: New Construction and Major Renovation
Cascade Township Office

Y	?	N			Prerequisites/Credits		Responsibility: Primary	Responsibility: Secondary
-	-	-			**Project Information**	-		
			PR1		Project Information	-		
Y	?	N						
1	8	16			**Integrative Process**	1		
1			IPc1		Integrative Process	1		
4	4	8			**Location and Transportation**	16		
			LTc1		LEED for Neighborhood Development Location	16		
	1		LTc2		Sensitive Land Protection	1		
		2	LTc3		High Priority Site	2		
1	2	2	LTc4		Surrounding Density and Diverse Uses	5		
	1	4	LTc5		Access to Quality Transit	5		
1			LTc6		Bicycle Facilities	4		
1			LTc7		Reduced Parking Footprint	1		
1			LTc8		Green Vehicles	1		
5	5	0			**Sustainable Sites**	10		
Y			SSp1		Construction Activity Pollution Prevention	Required		
1			SSc1		Site Assessment	1		
	2		SSc2		Site Development - Protect or Restore Habitat	2		
	1		SSc3		Open Space	1		
3	1		SSc4		Rainwater Management	3		
1	1		SSc5		Heat Island Reduction	2		
1			SSc6		Light Pollution Reduction	1		
6	4	2			**Water Efficiency**	11		
Y			WEp1		Outdoor Water Use Reduction	Required		
Y			WEp2		Indoor Water Use Reduction	Required		
Y			WEp3		Building-Level Water Metering	Required		
1	1		WEc1		Outdoor Water Use Reduction	2		
3	3		WEc2		Indoor Water Use Reduction	6		
		2	WEc3		Cooling Tower Water Use	2		
1			WEc4		Water Metering	1		
12	16	6			**Energy and Atmosphere**	33		
Y			EAp1		Fundamental Commissioning and Verification	Required		
Y			EAp2		Minimum Energy Performance	Required		
Y			EAp3		Building-Level Energy Metering	Required		
Y			EAp4		Fundamental Refrigerant Management	Required		
	6		EAc1		Enhanced Commissioning	6		
8	6	4	EAc2		Optimize Energy Performance	18		
1			EAc3		Advanced Energy Metering	1		
1	1		EAc4		Demand Response	2		
1	1	1	EAc5		Renewable Energy Production	3		
1			EAc6		Enhanced Refrigerant Management	1		
	2		EAc7		Green Power and Carbon Offsets	2		
1	10	2			**Materials and Resources**	13		
Y			MRp1		Storage and Collection of Recyclables	Required		
Y			MRp2		Construction and Demolition Waste Management Planning	Required		
	3	2	MRc1		Building Life-Cycle Impact Reduction	5		
	2		MRc2		Building Product Disclosure and Optimization - Environmental Product	2		
	2		MRc3		Building Product Disclosure and Optimization - Sourcing of Raw Materials	2		
	2		MRc4		Building Product Disclosure and Optimization - Material Ingredients	2		
1	1		MRc5		Construction and Demolition Waste Management	2		
10	0	0			**Indoor Environmental Quality**	10		
Y			IEQp1		Minimum Indoor Air Quality Performance	Required		
Y			IEQp2		Environmental Tobacco Smoke Control	Required		
2			IEQc1		Enhanced Indoor Air Quality Strategies	2		
3			IEQc2		Low-Emitting Materials	3		
1			IEQc3		Construction Indoor Air Quality Management Plan	1		
2			IEQc4		Indoor Air Quality Assessment	2		
1			IEQc5		Thermal Comfort	1		
2			IEQc6		Interior Lighting	2		
3			IEQc7		Daylight	3		
1			IEQc8		Quality Views	1		
1			IEQc9		Acoustic Performance	1		
5	3	0			**Innovation**	6		
2	3		IMc1		Innovation	5		
1			IMc2		LEED Accredited Professional	1		
3	1	0			**Regional Priority**	4		
1			RPc1		Regional Priority: SSc4 Rainwater Management	1		
1			RPc2		Regional Priority: EAc2 Optimize Energy Performance	1		
1			RPc3		Regional Priority: Specific Credit	1		
1	1		RPc4		Regional Priority: Specific Credit	1		
60	48	12			**TOTALS** Possible Points:	110		

Certified: 40 to 49 points, Silver: 50 to 59 points, Gold: 60 to 79 points, Platinum: 80 to 110

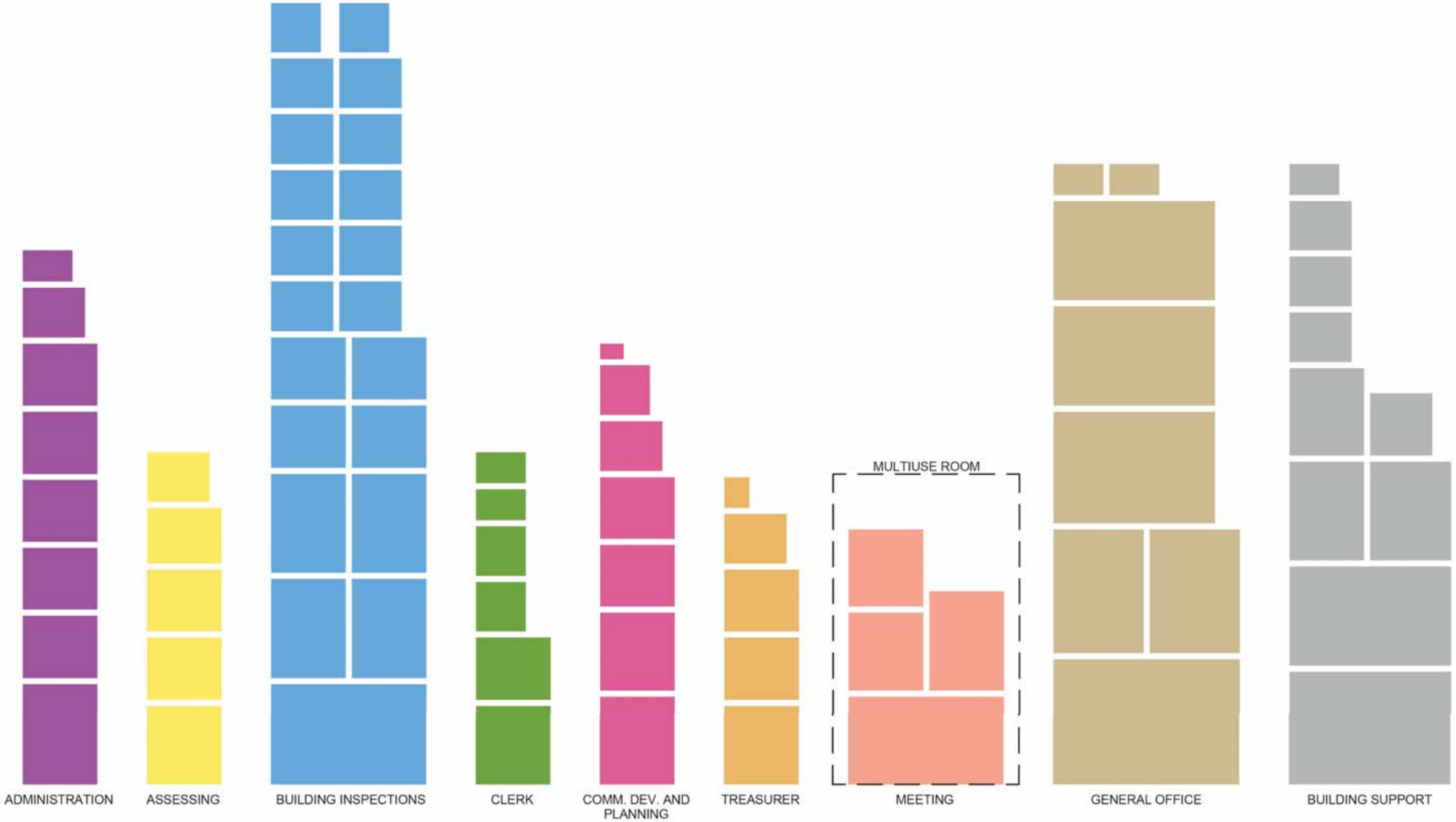

20+ Year Township Hall Program

03
SITE DEVELOPMENT

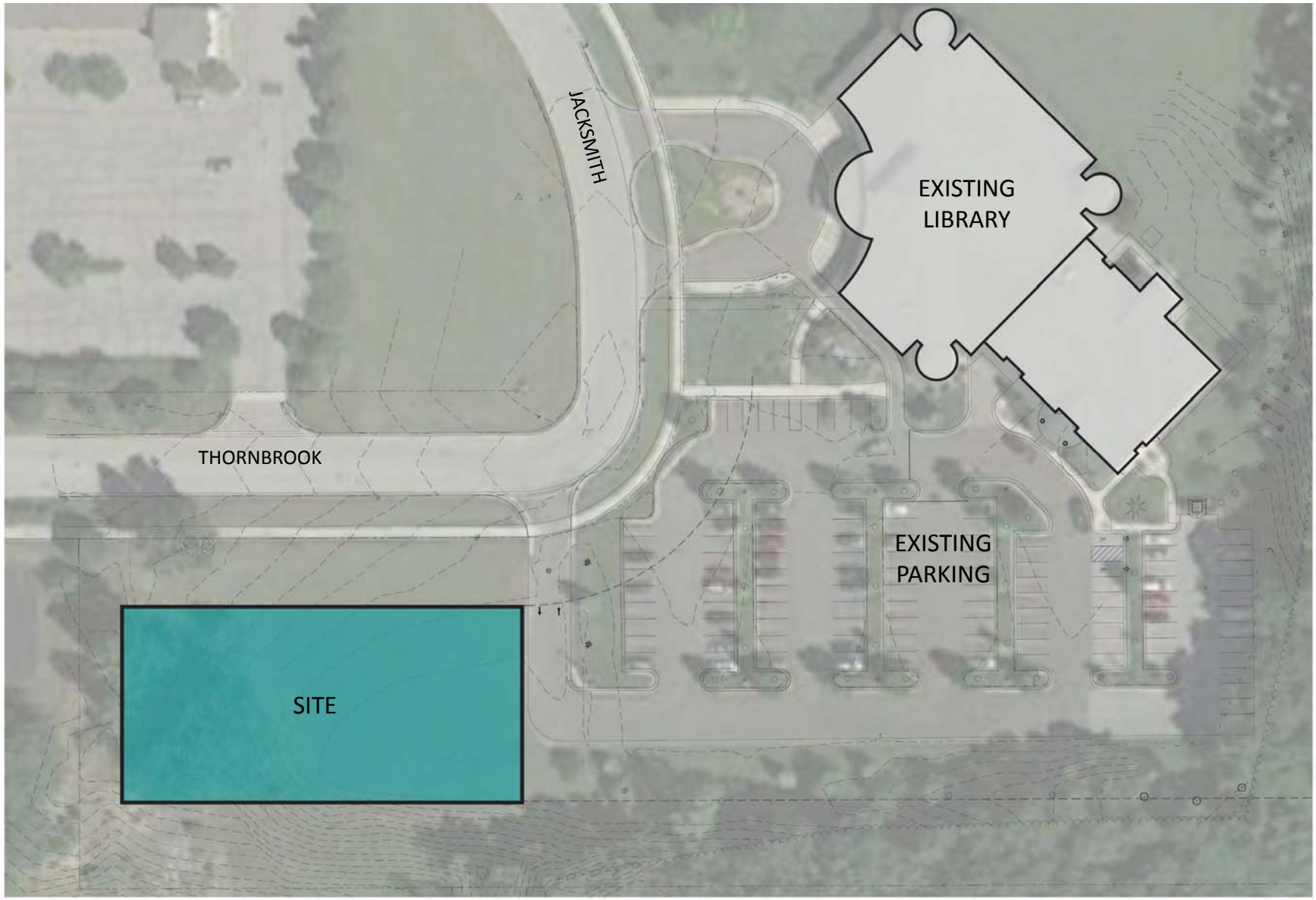

Site Selection

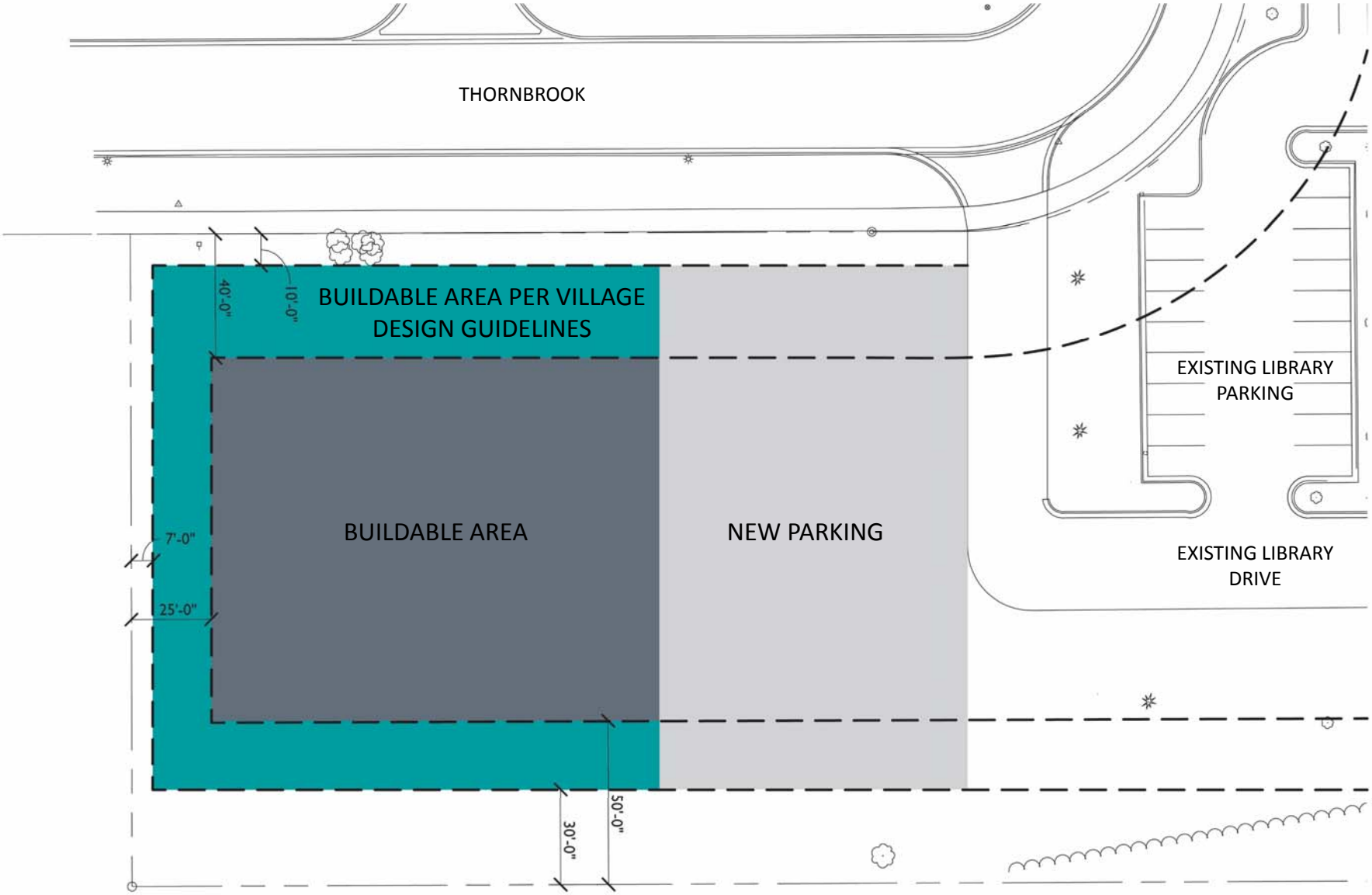

Site Constraints

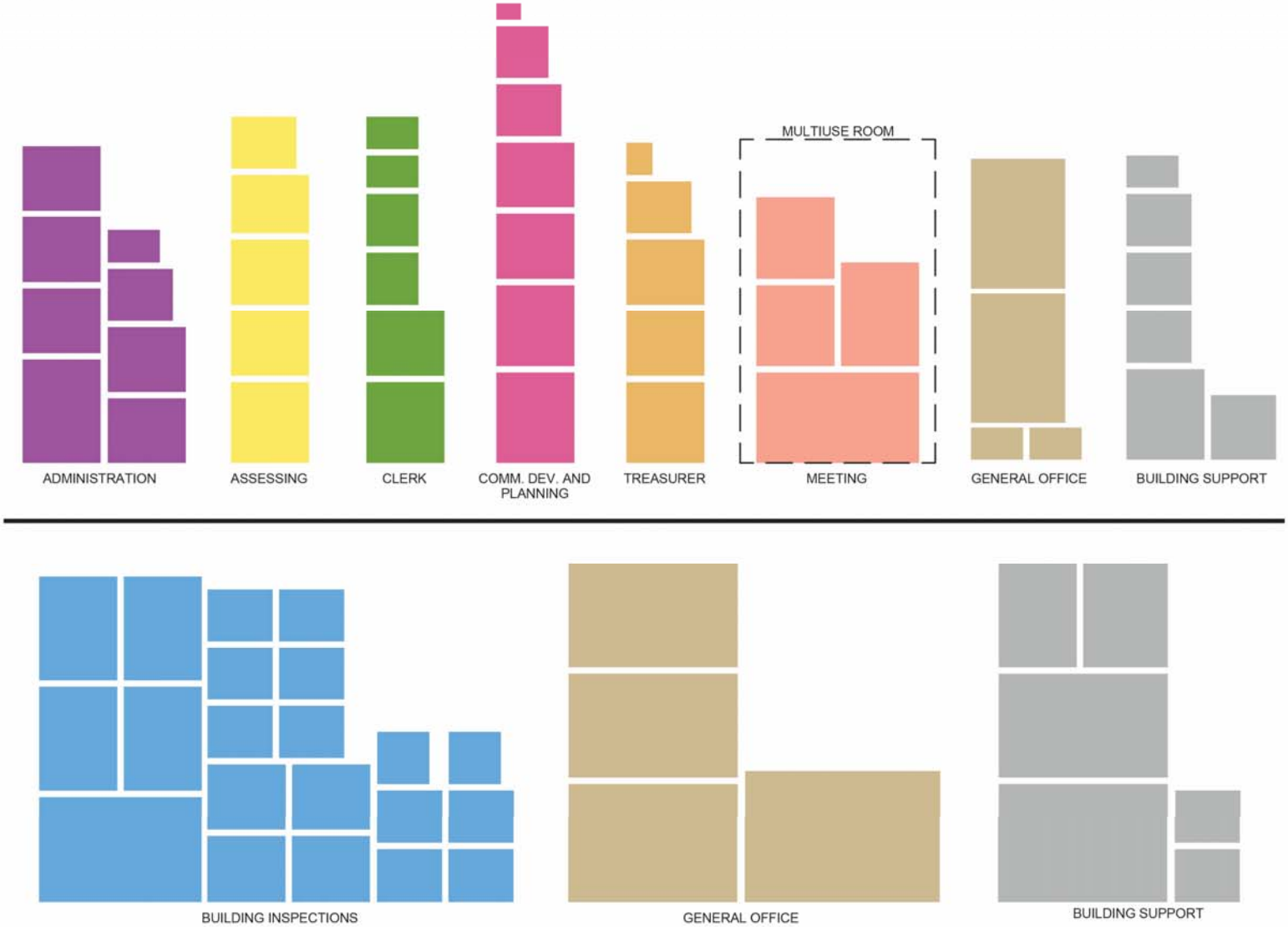

Multi-Level Program

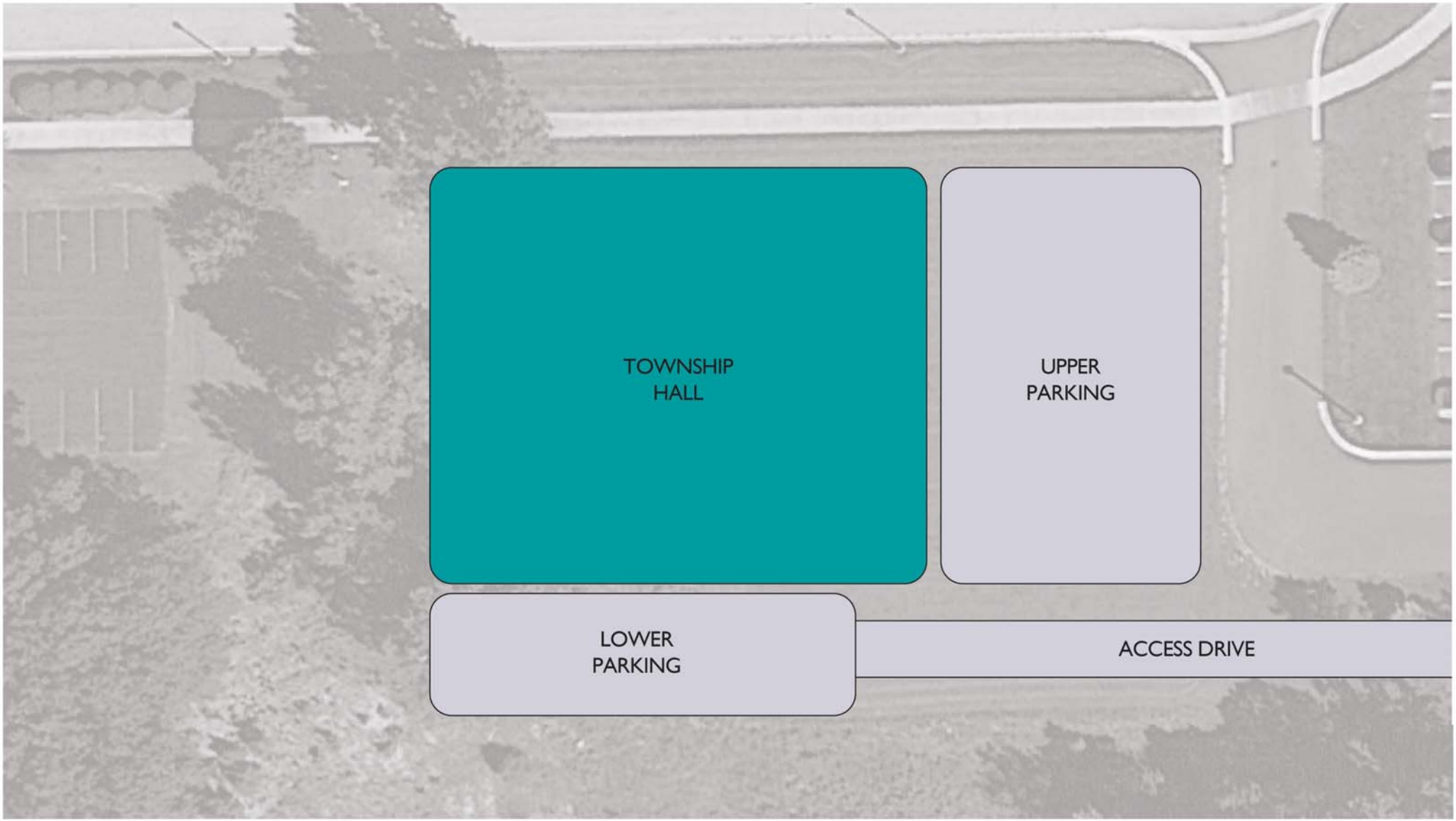

Study A

Study B

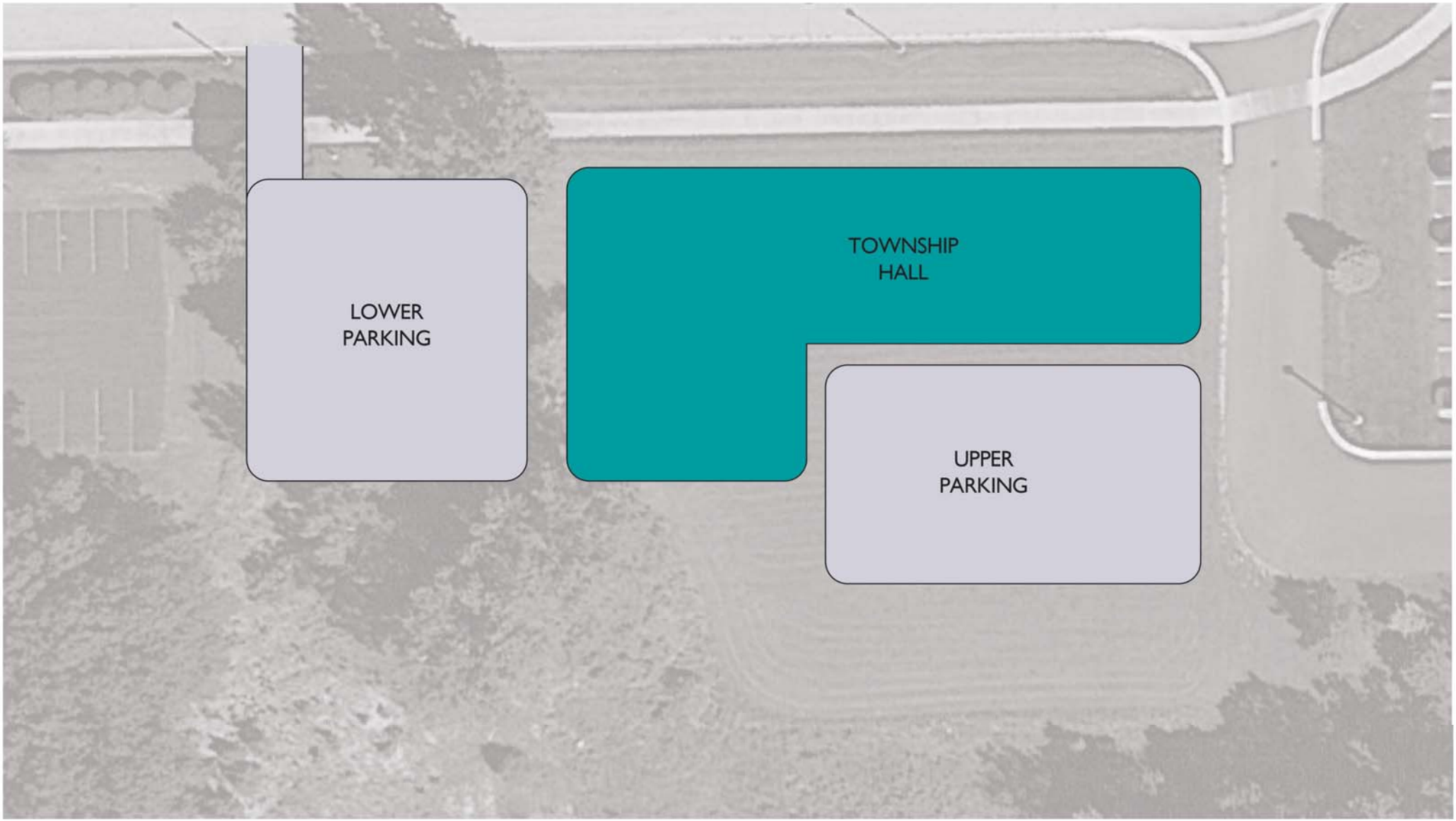

Study C

04

CONCEPTUAL BUILDING DESIGN

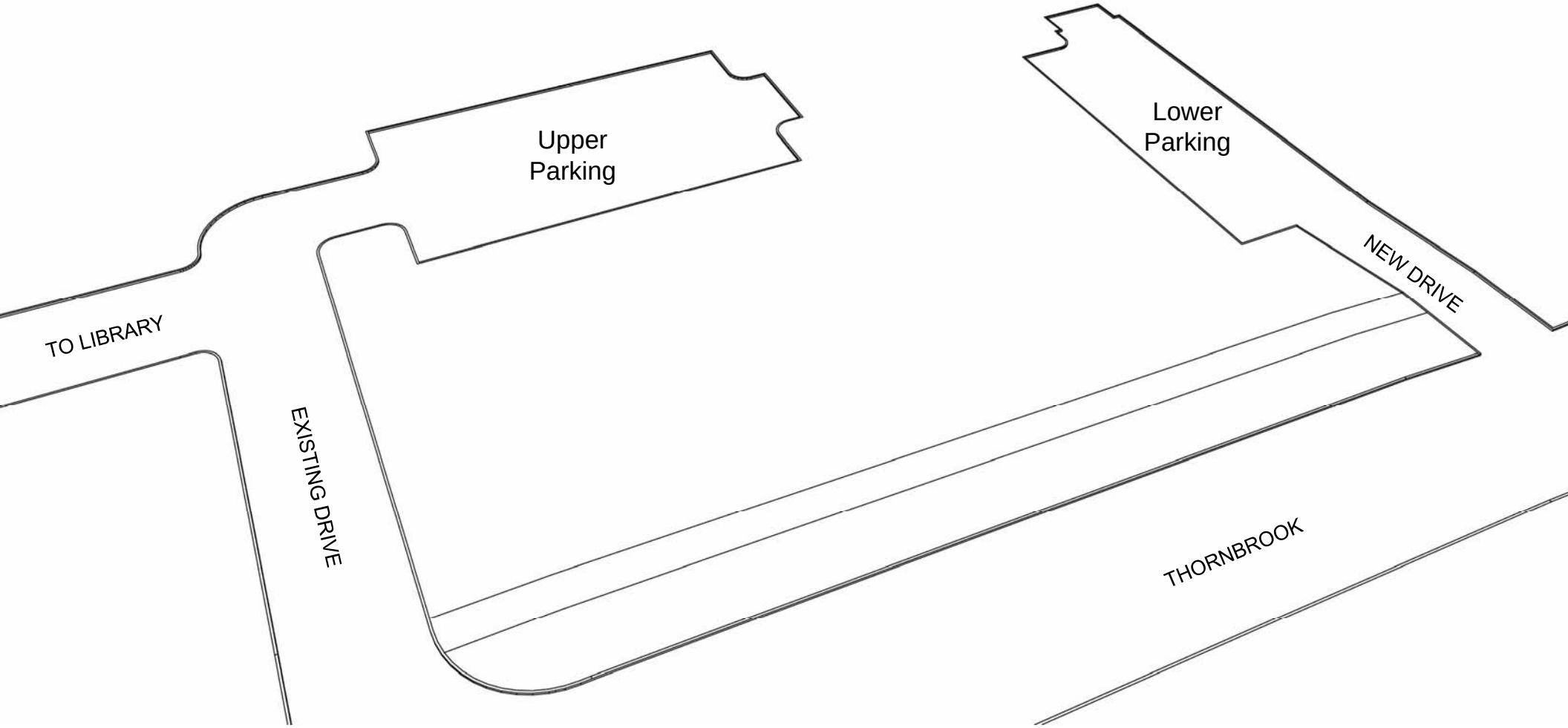

Site Condition

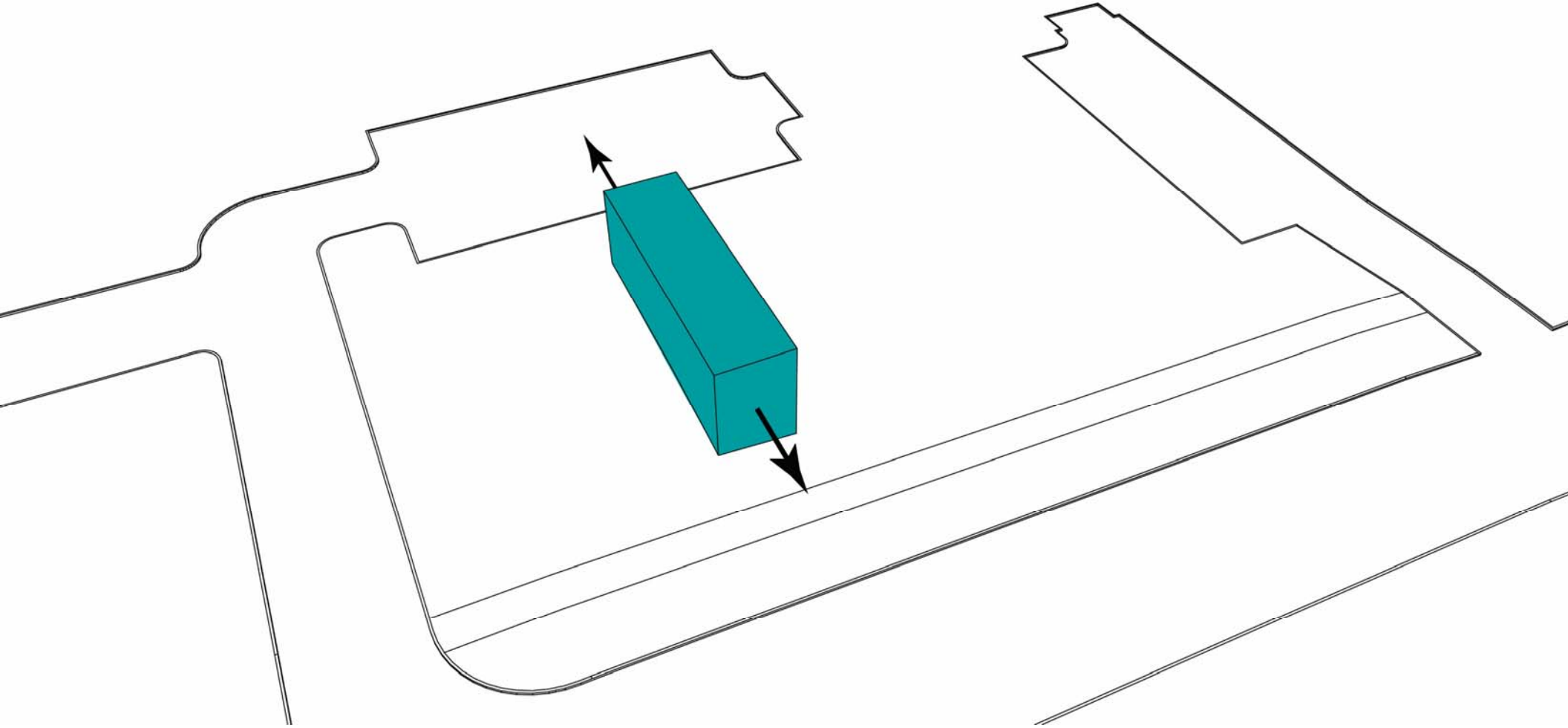

Central Access

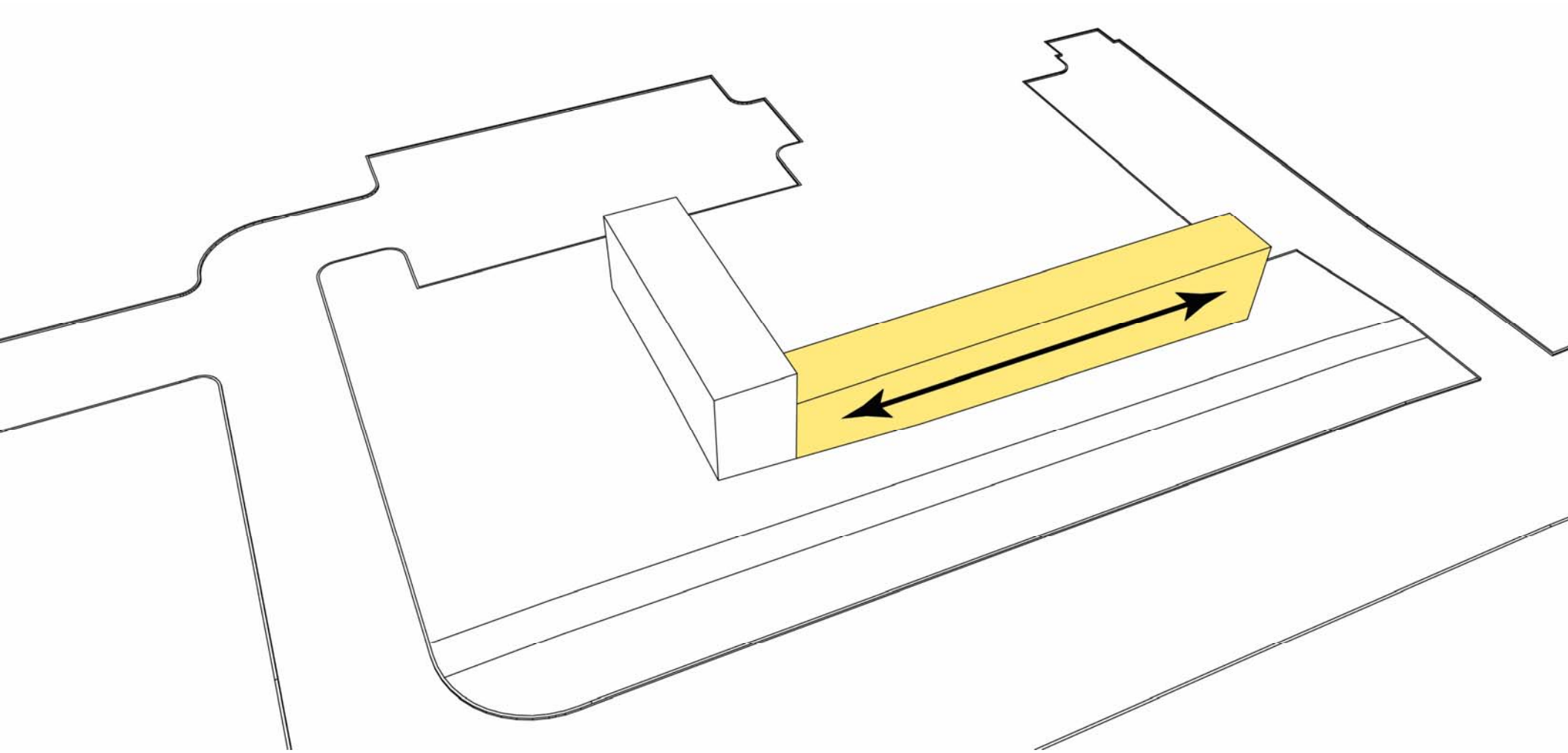

Visible Service

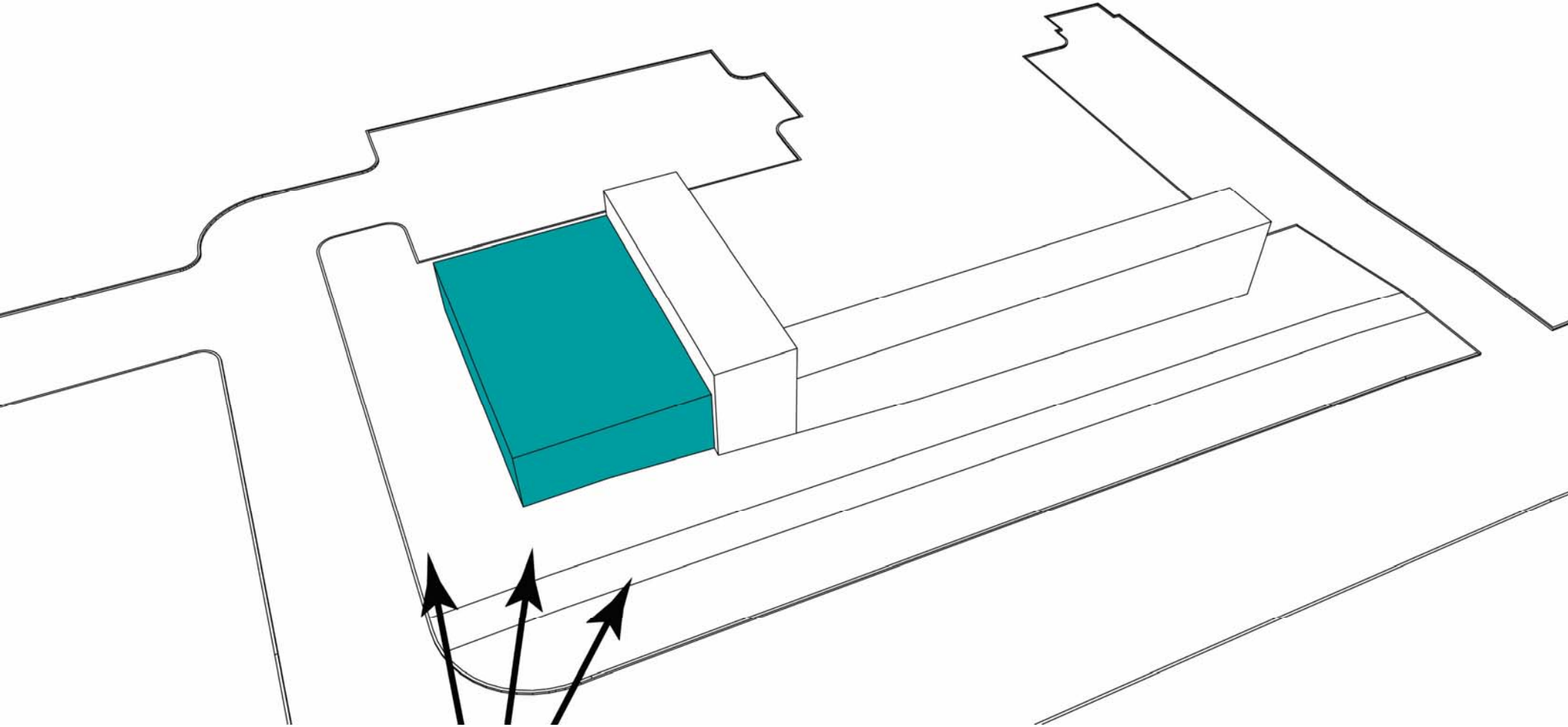

Event Prominence

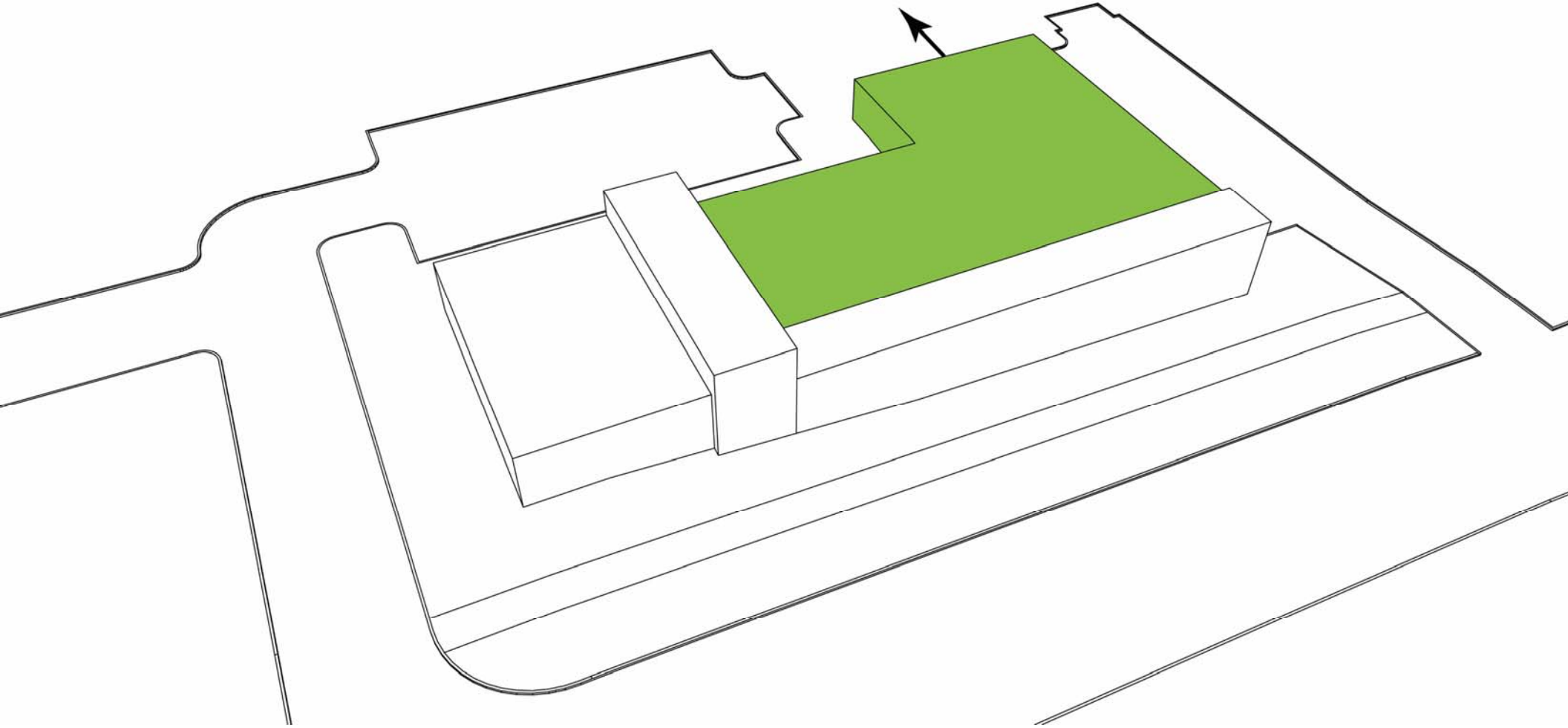

Offices + Workspace

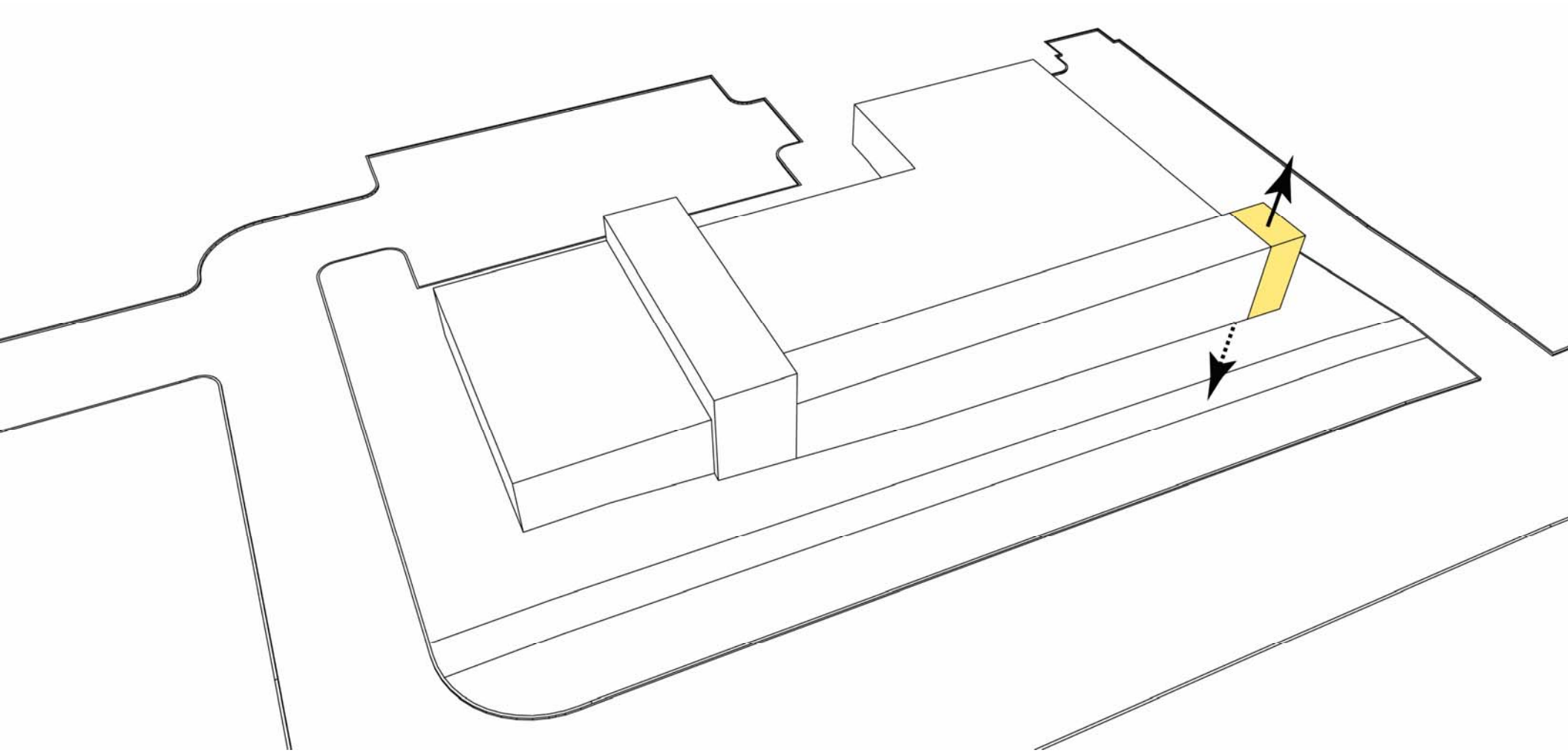

Vertical Circulation

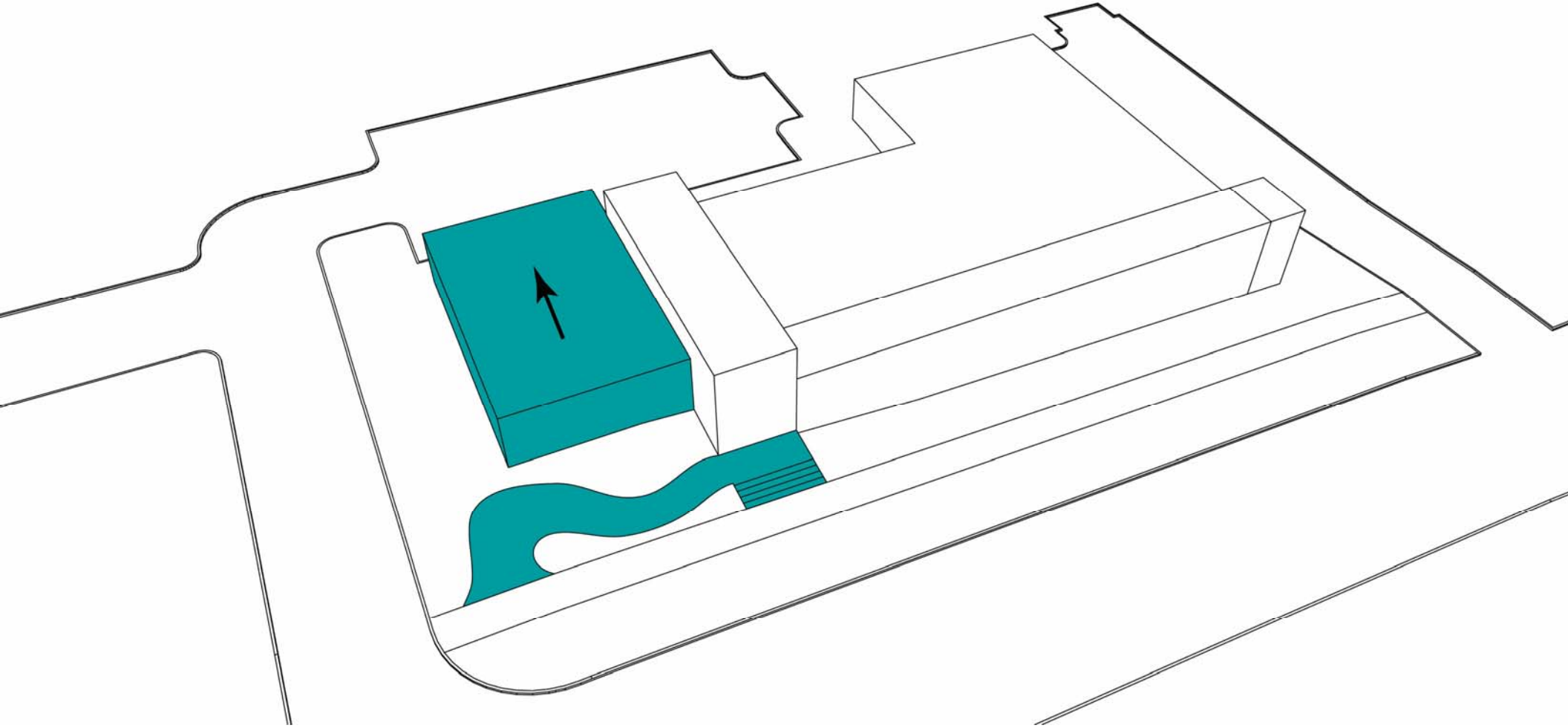

Entry Plaza

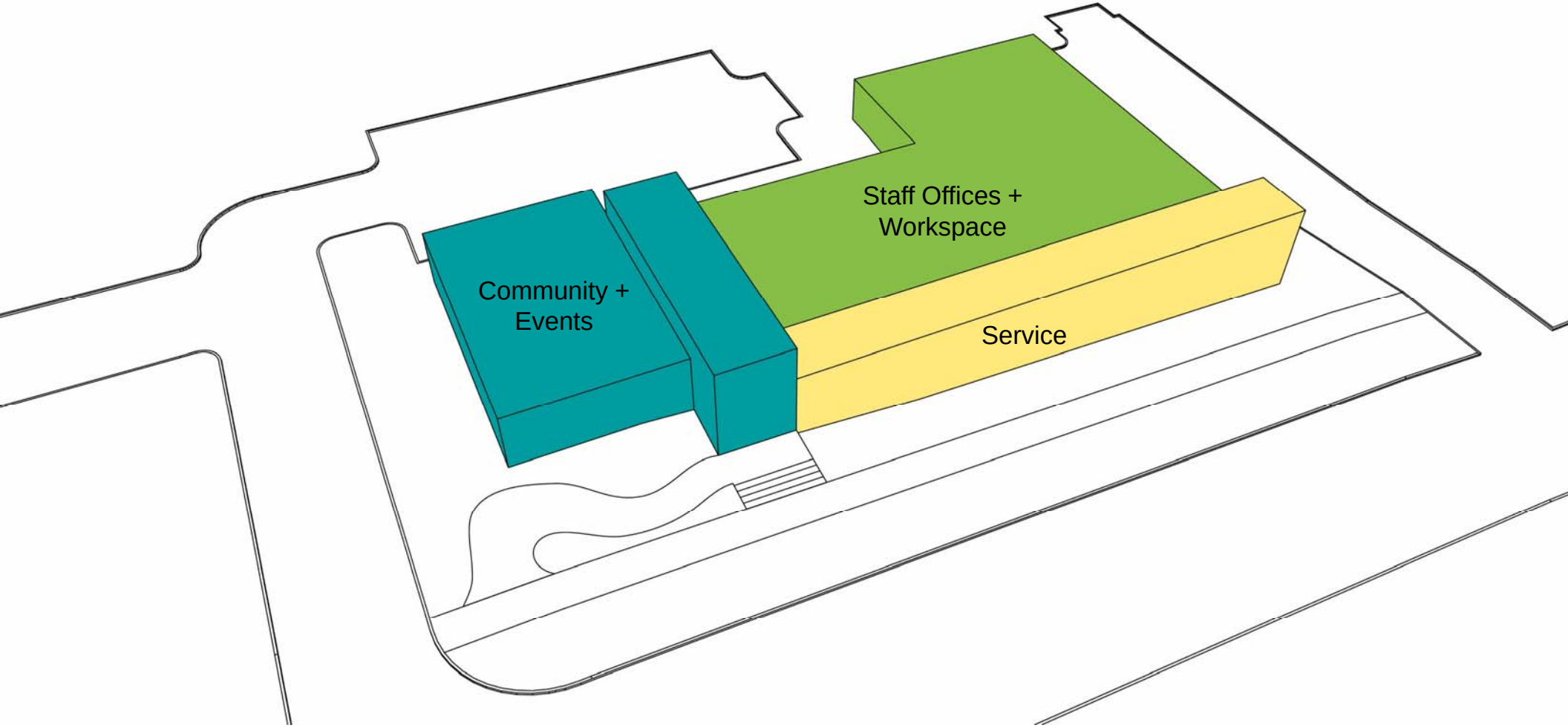

Township Hall Zoning

05

PROPOSED TOWNSHIP HALL

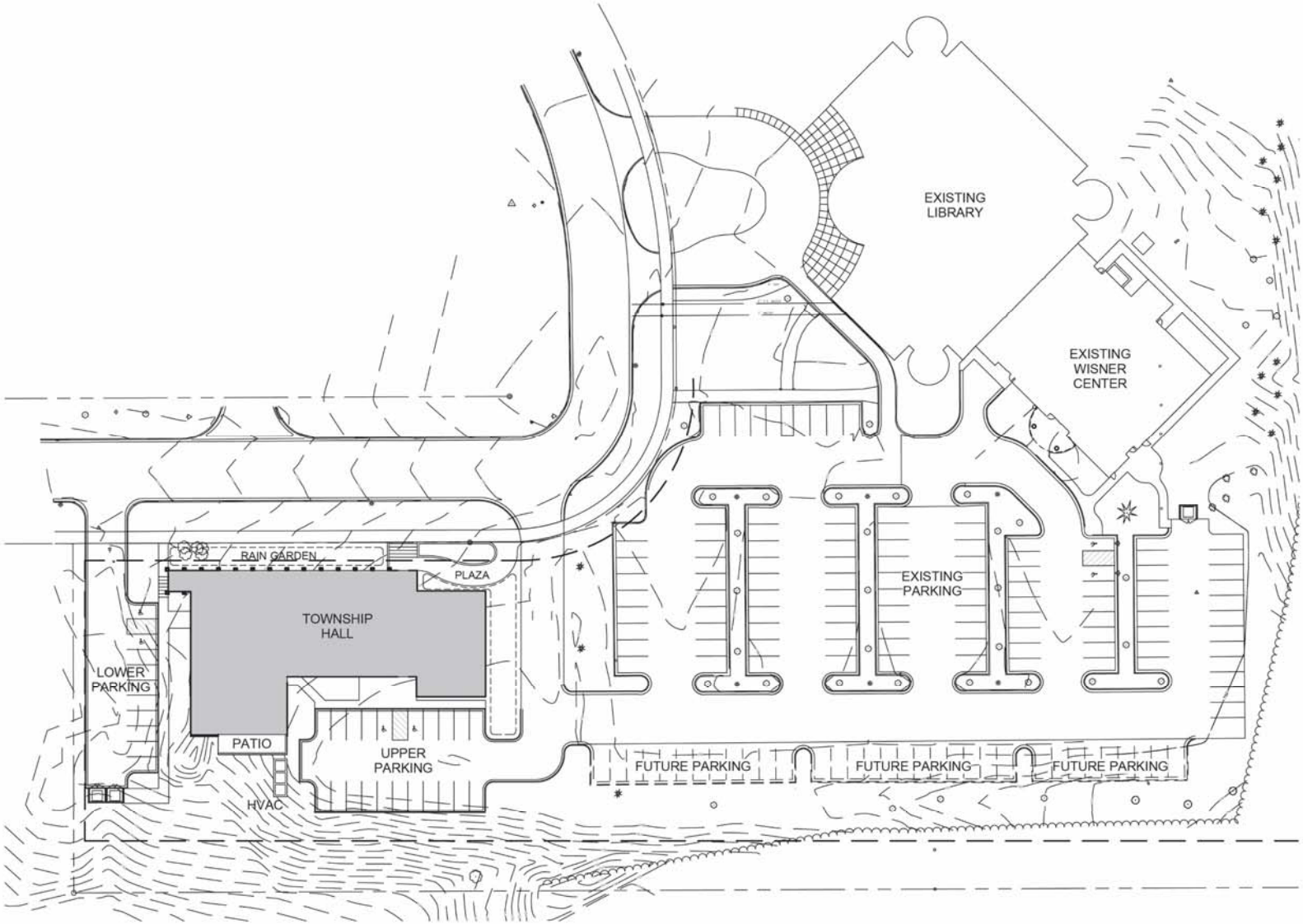

Proposed Site Plan

Proposed Main Level

Proposed Lower Level

Jacksmith + Thornbrook

Approach from West

South Entry

Entry Hall

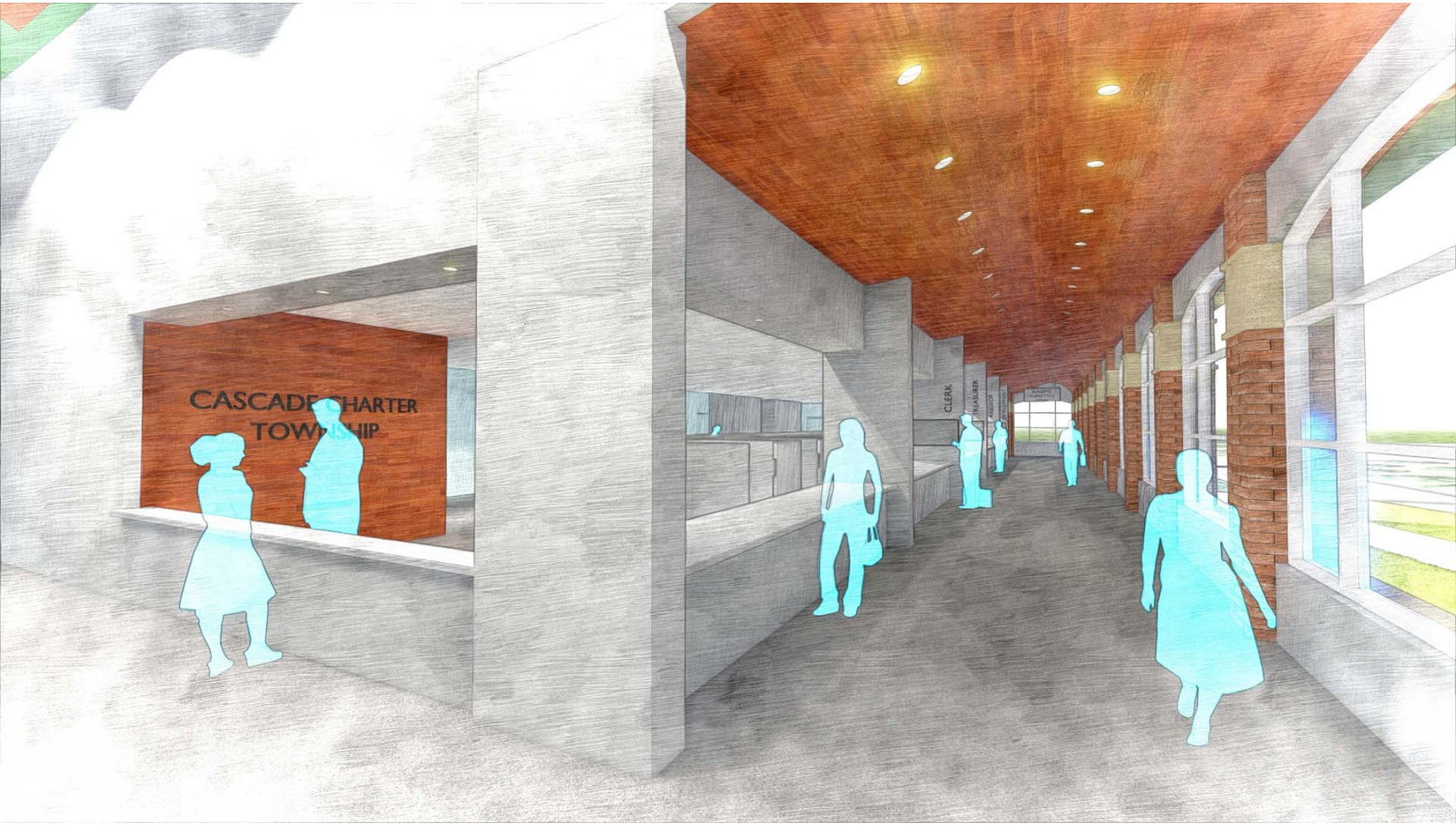

Service Hall

North Elevation

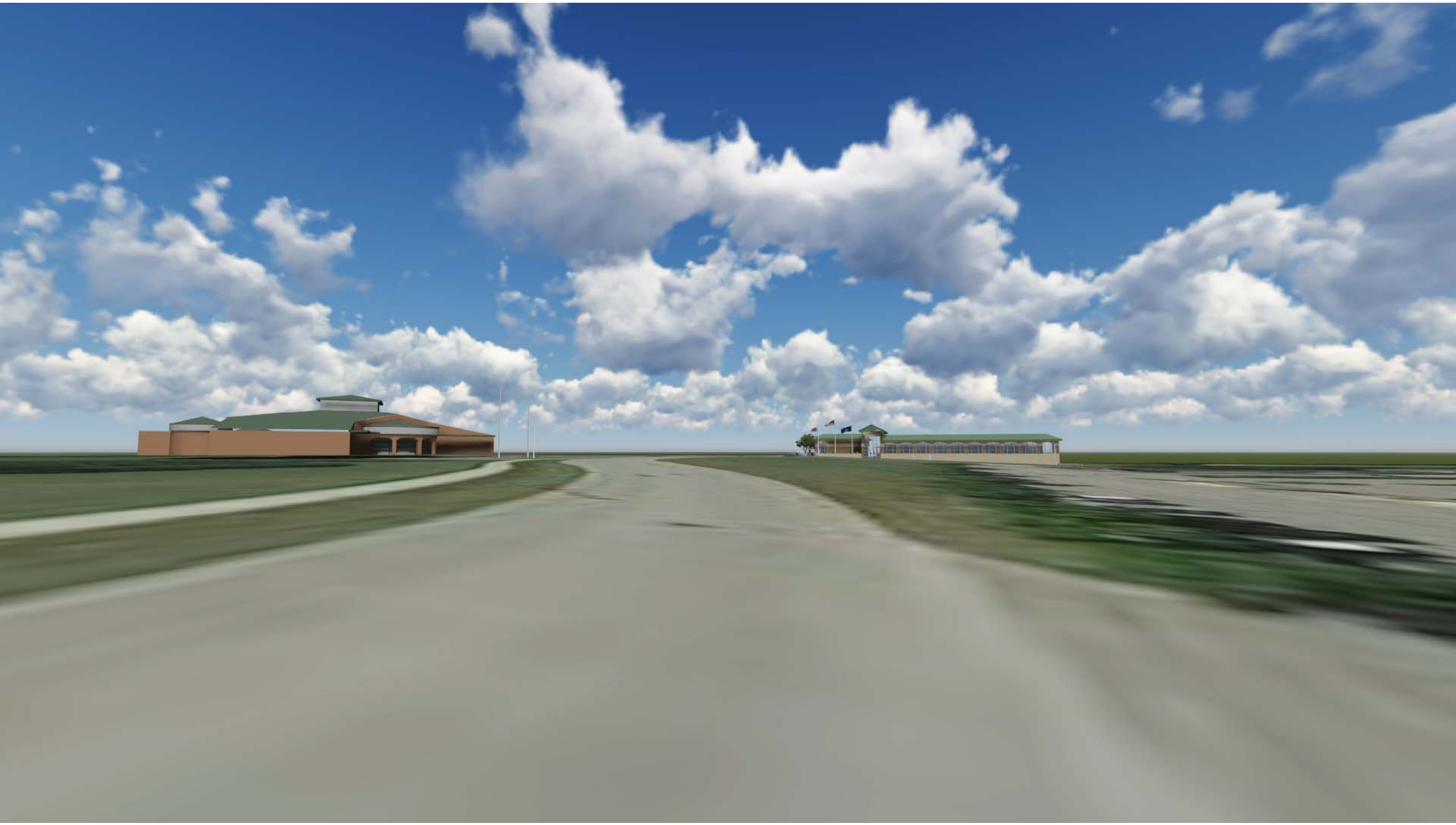

06

COST + FUNDING

Project Cost Estimate

Building and Site Improvements	$5,869,155
Construction Contingency (5%)	$299,628
Total Construction Cost	*$6,168,783*
Furnishings, Fixtures + Equipment (FF+E)	$552,000
FF+E Contingency (10%)	$55,200
Total FF+E Cost	*$607,200*
Soft Costs (Site Survey, Soil Borings, A/E Fees, LEED, Moving, Etc.)	$663,500
Soft Costs Contingency (10%)	$66,350
Total Soft Costs	*$729,850*
Total Project Cost Estimate	**$7,505,833**

Funding Options

- Cash Fund Entire Project
- Bond Fund Entire Project
- Split of Cash Funding and Financing
  - Appropriate Balance
  - Appropriate Length of Bond
  - Financial Flexibility
    - Retaining fund balance vs. additional cost of funding

Board Approved Financing Plan

- Cash Fund Soft Costs / FF+E / 50% Construction Cost
  - Case Outlay - $4.4 Million
  - Bonding - $3.1 Million over 10 years
- Annual Debt Service - $380,000
- Interest Paid on Project - $650,000

Where Will Funding Come From?

- General Fund – 70-75%
  - Cash from Fund Balance
    - Approximately $8.1 Million
  - Debt Service from Current Budget
    - 10 year projection show surplus to cover payments
    - No new revenues needed

Where Will Funding Come From?

- Building Fund – 25-30%
  - Cash from Fund Balance
    - Approximately $2.1 Million
  - Debt Service from Current Budget
    - Significant Surpluses past 4 years
    - If there is a building downturn, general fund may cover additional debt service
    - Permit fees would not be adjusted to cover debt service

Jacksmith + Thornbrook